06258600 - TH-AX D68 H100 UT20X20 MZ

Type	TH-AX Axial Tool holder
Mounting	CYLINDRICAL SHANK 68
Tool output	Axial Square Tool Holder 20x20
Coolant	External coolant
H [mm]	100

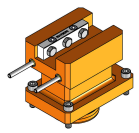

Accessories	N.A.
Notes	N.A.
Mounting tips	N.A.

Always check live tool dimensions on the turret

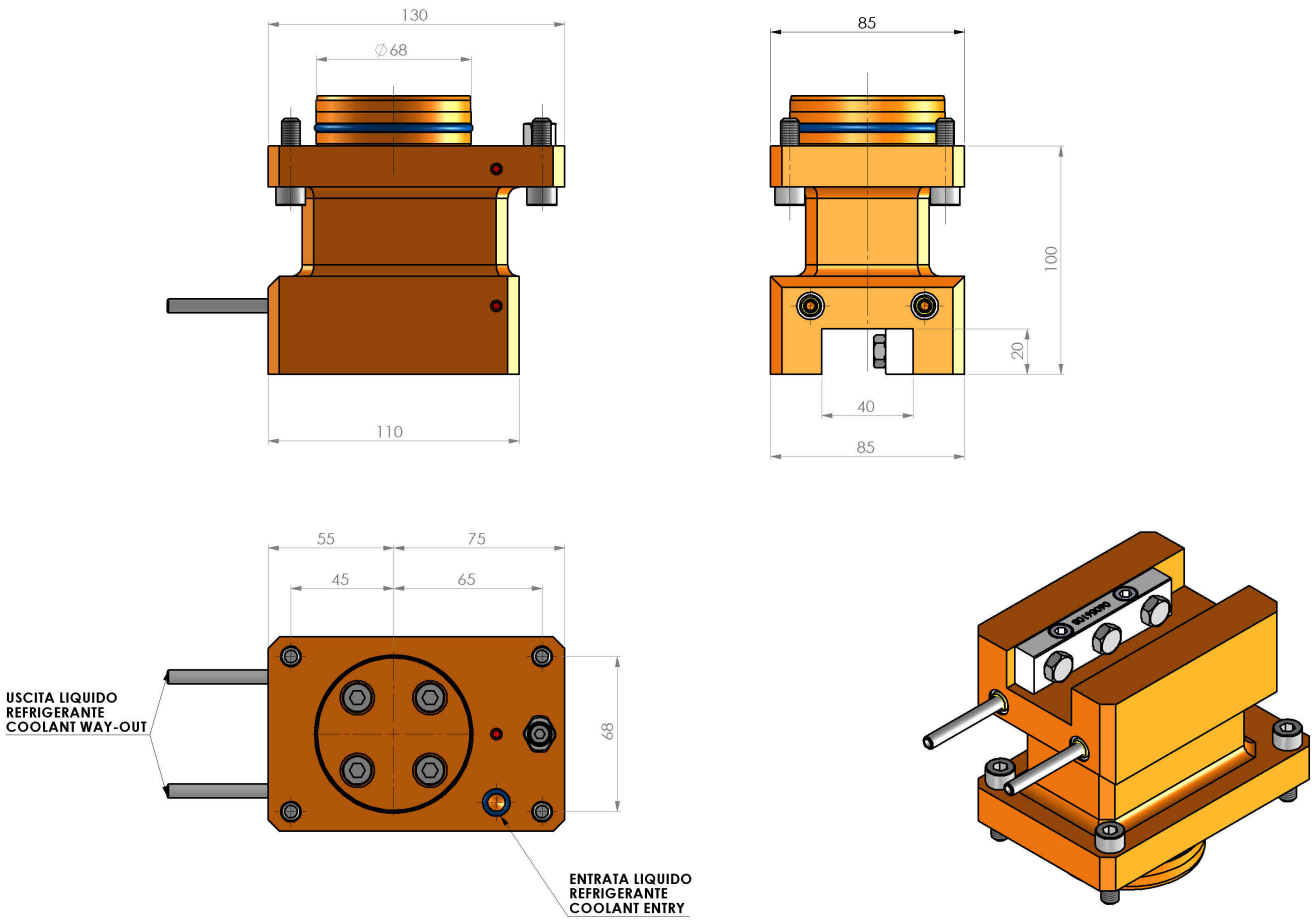

DATE/DATA	
06/12/2018	06258600-R011

Subject to technical changes