05455700 - LT-A VDI40 C40 L HS H130

Type	LT-A Tool holder angle 90°
Mounting	VDI 40
Tool output	Polygonal shank C40 ISO 26623-1
Coolant	External coolant
Direction of rotation	r1 r2
Max speed [rpm]	10000
Max torque [Nm]	63
Ratio	1:1
H [mm]	130
H1 [mm]	41
Accessories	N.A.
Notes	N.A.
Mounting tips	Main spindle only

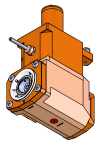

ATTENTION: CHECK THE ORIENTATION OF THE VDI TEETH

Always check live tool dimensions on the turret

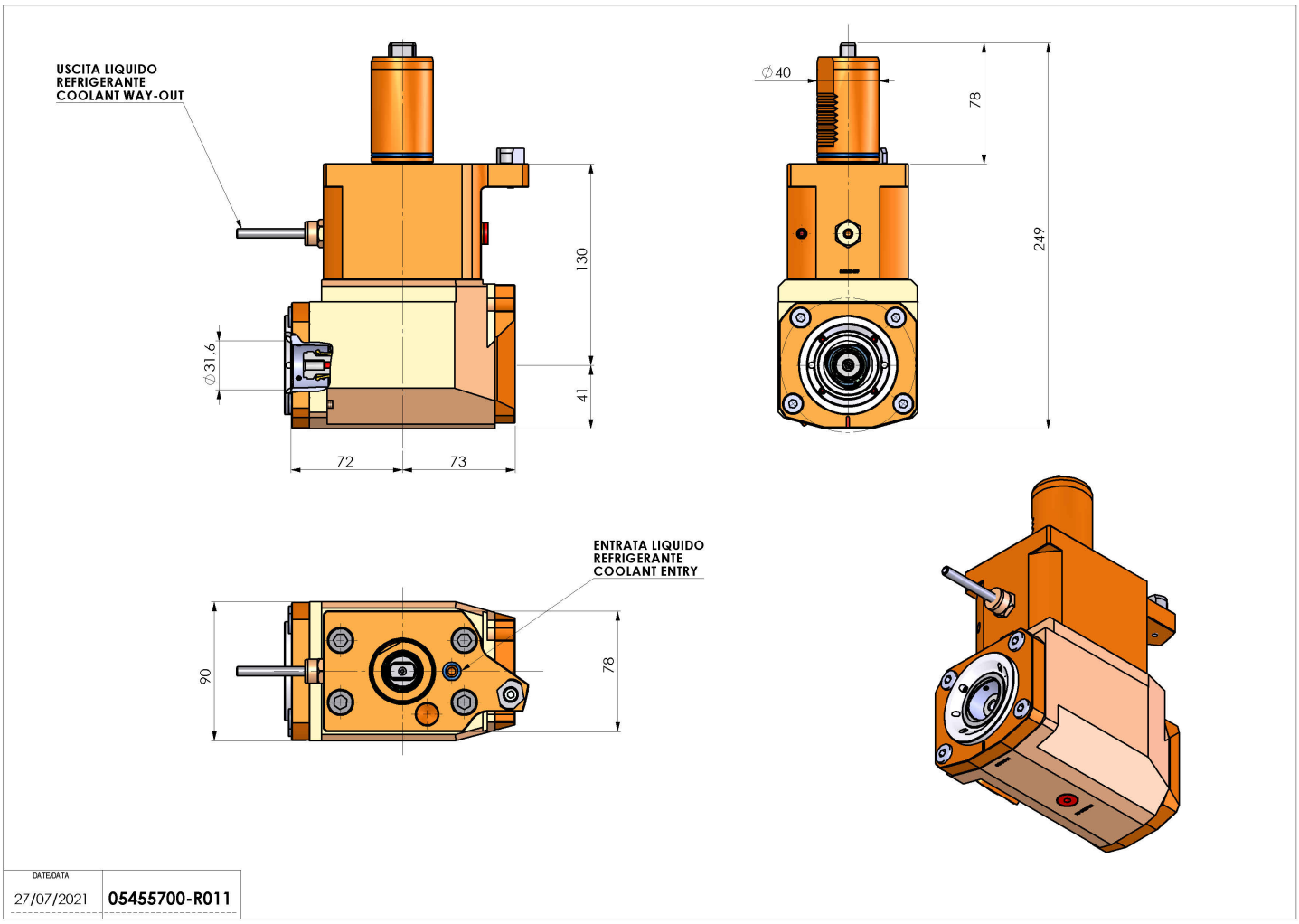

Subject to technical changes