05453300 - LT-S VDI40 C40 H66

Type	LT-S Tool holder straight
Mounting	VDI 40
Tool output	Polygonal shank C40 ISO 26623-1
Coolant	External coolant
Direction of rotation	r1 r2
Max speed [rpm]	6000
Max torque [Nm]	63
Ratio	1:1
H [mm]	66
Accessories	N.A.
Notes	N.A.
Mounting tips	N.A.

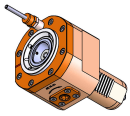

ATTENTION: CHECK THE ORIENTATION OF THE VDI TEETH

Always check live tool dimensions on the turret

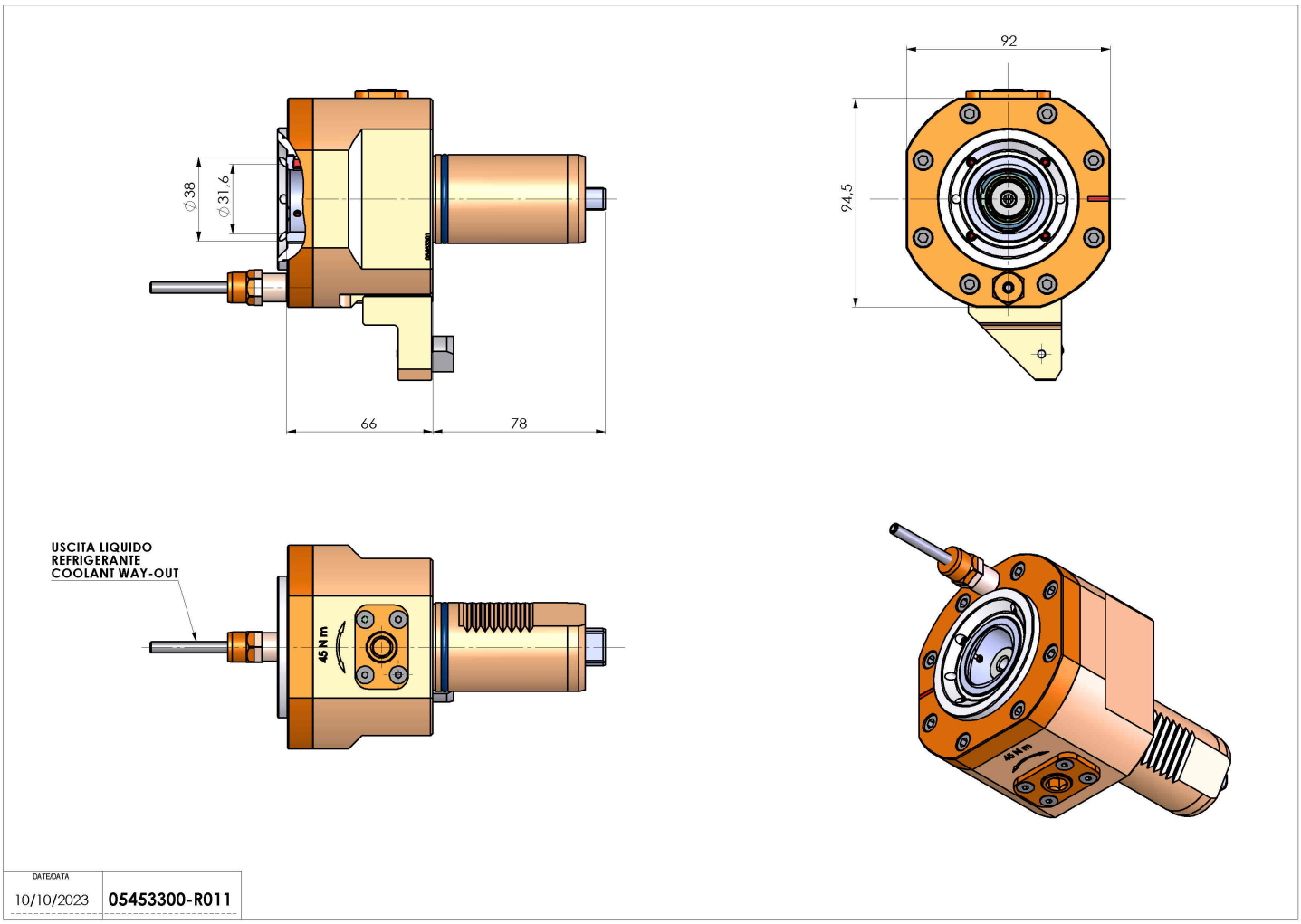

Subject to technical changes