05076100 - LT-S D55 ER32FOFS51RF2:1H115BI

Type	LT-S OFS Tool holder straight offset
Mounting	CYLINDRICAL SHANK 55
Tool output	Collet nut ER 32 F - internal nut
Coolant	Internal coolant
Offset [mm]	51
Direction of rotation	r1 r2
Max speed [rpm]	in 6000 / out 3000
Max torque [Nm]	in 70 / out 140
Ratio	2:1
H [mm]	115
Max pressure [bar]	20
Accessories	N.A.
Notes	N.A.
Mounting tips	N.A.

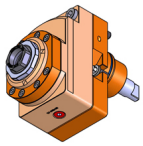

Always check live tool dimensions on the turret

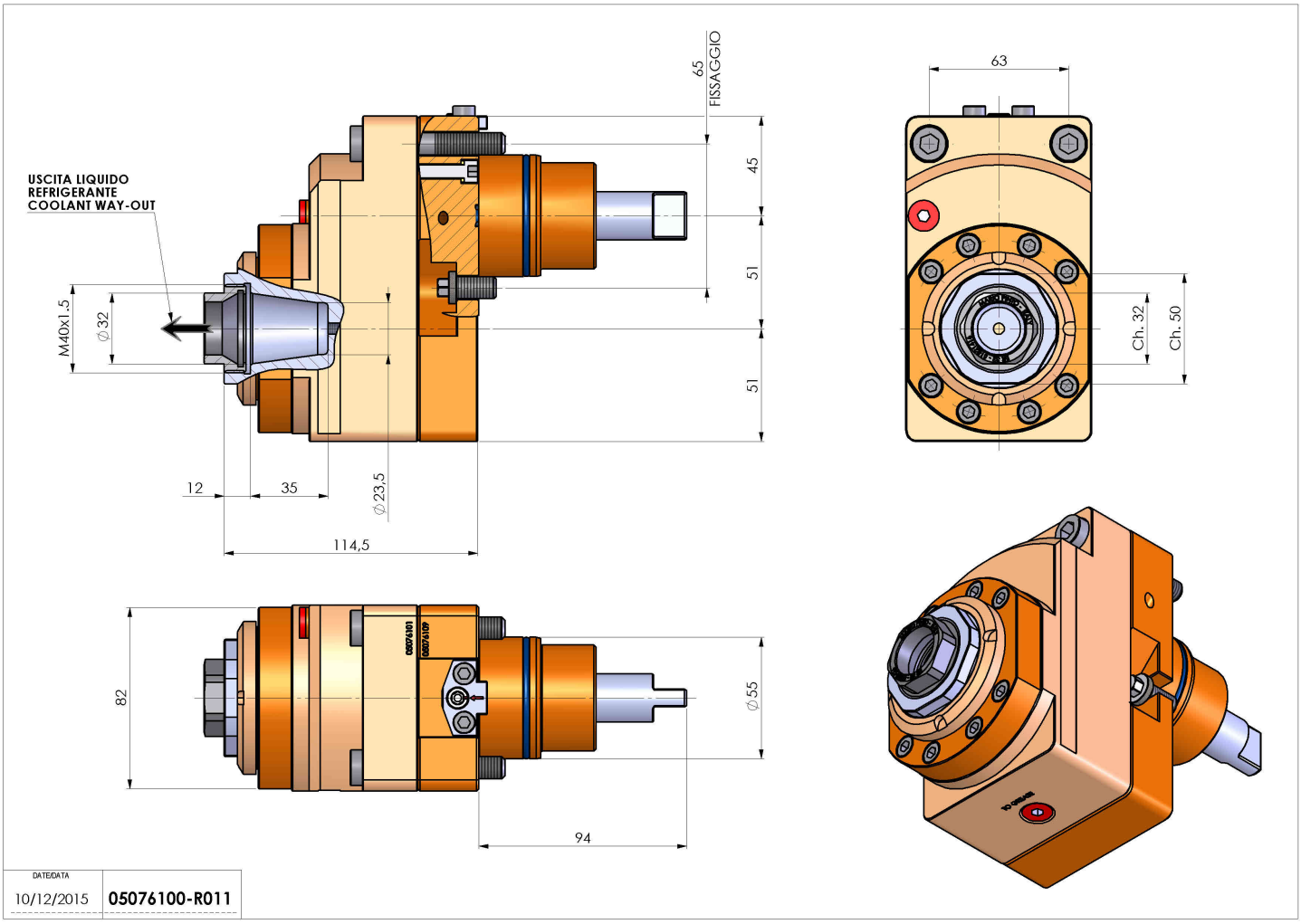

Subject to technical changes