06156100 - TH-BRB P18 D40 LR H130

Type	TH-BRB Boring bar holder
Mounting	CYLINDRICAL SHANK 55
Tool output	Boring Bar Holder 40
Coolant	External coolant
H [mm]	130

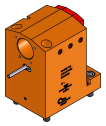

Accessories	N.A.
Notes	N.A.
Mounting tips	N.A.

Always check live tool dimensions on the turret

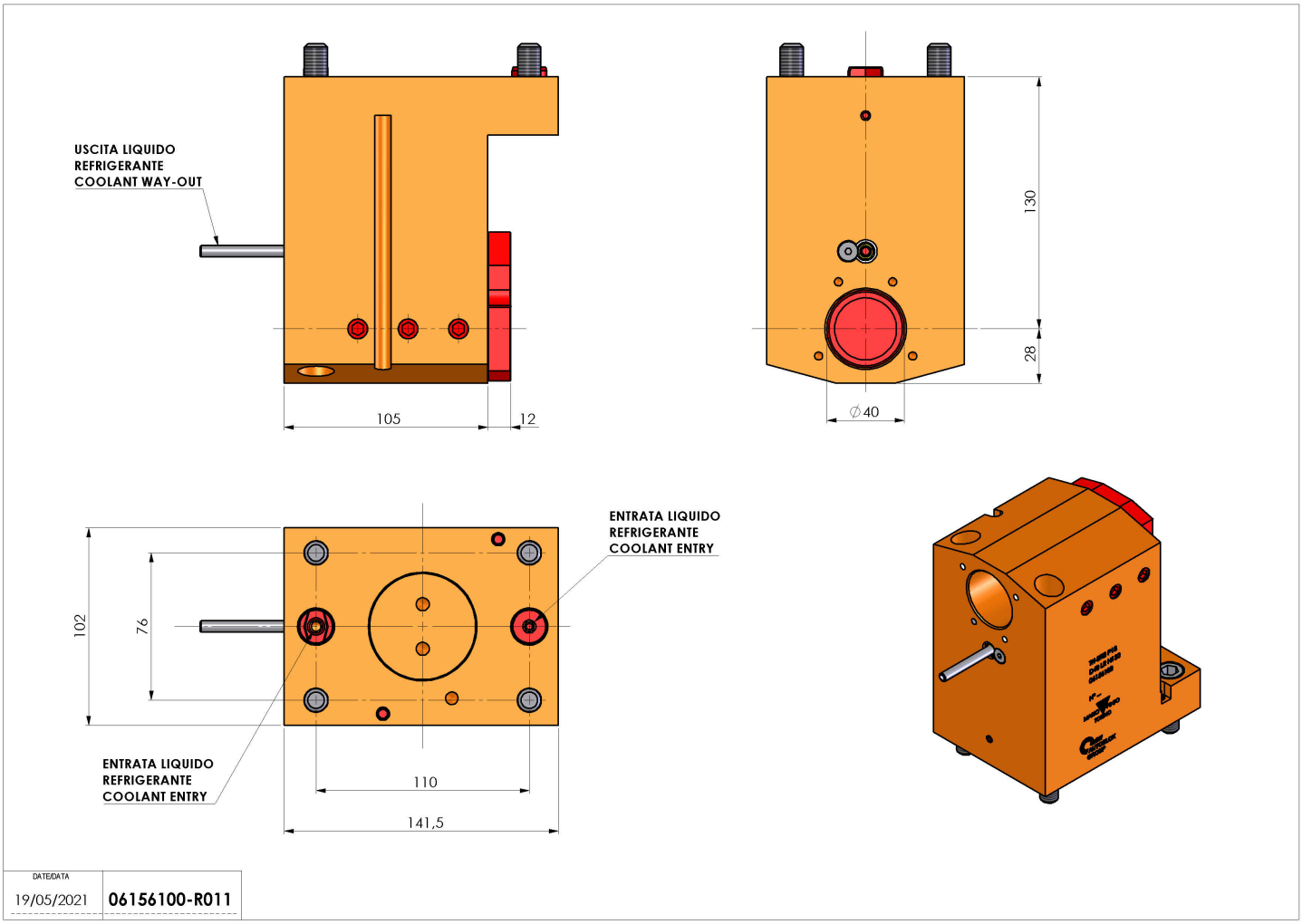

Subject to technical changes