# 06011200 - TH-BRB D44 D20-20 L62 H65

| | |
|---|---|
| **Type** | TH-BRB<br>Boring bar holder |
| **Mounting** | CYLINDRICAL SHANK 44 |
| **Tool output** | Boring Bar Holder 20 |
| **Coolant** | External / Internal coolant |
| **H [mm]** | 65 |

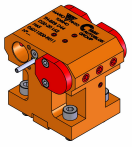

| | |
|---|---|
| **Accessories** | N.A. |
| **Notes** | N.A. |
| **Mounting tips** | N.A. |

Always check live tool dimensions on the turret

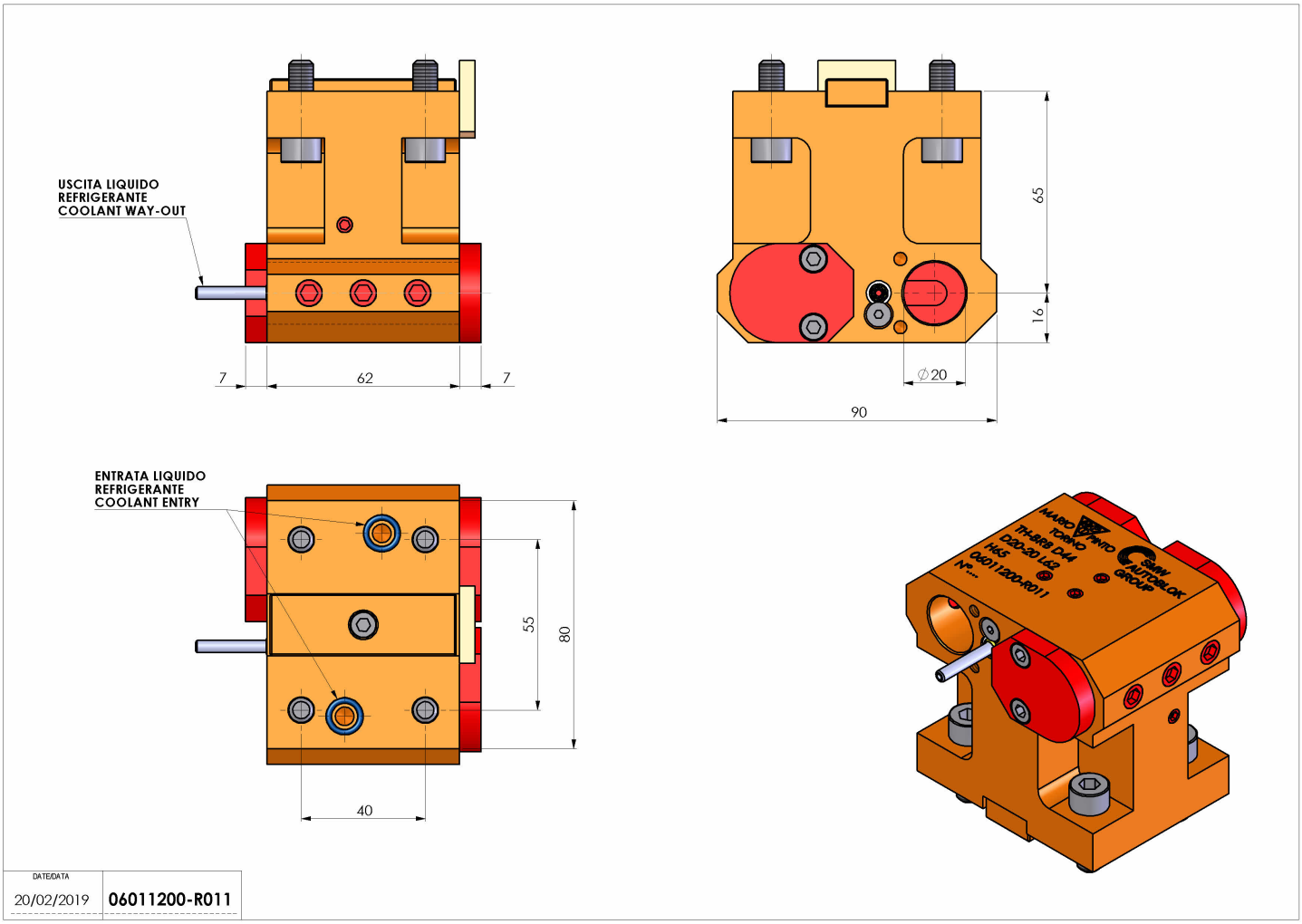


**Subject to technical changes**