05370600 - LT-A D55 ER25F LR H80

Type	LT-A Tool holder angle 90°
Mounting	CYLINDRICAL SHANK 55
Tool output	Collet nut ER 25 F - internal nut
Coolant	External coolant
Direction of rotation	r1 r2
Max speed [rpm]	6000
Max torque [Nm]	40
Ratio	1:1
H [mm]	80
H1 [mm]	32.5
Accessories	N.A.
Notes	N.A.
Mounting tips	Main and secondary spindle

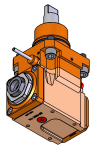

Always check live tool dimensions on the turret

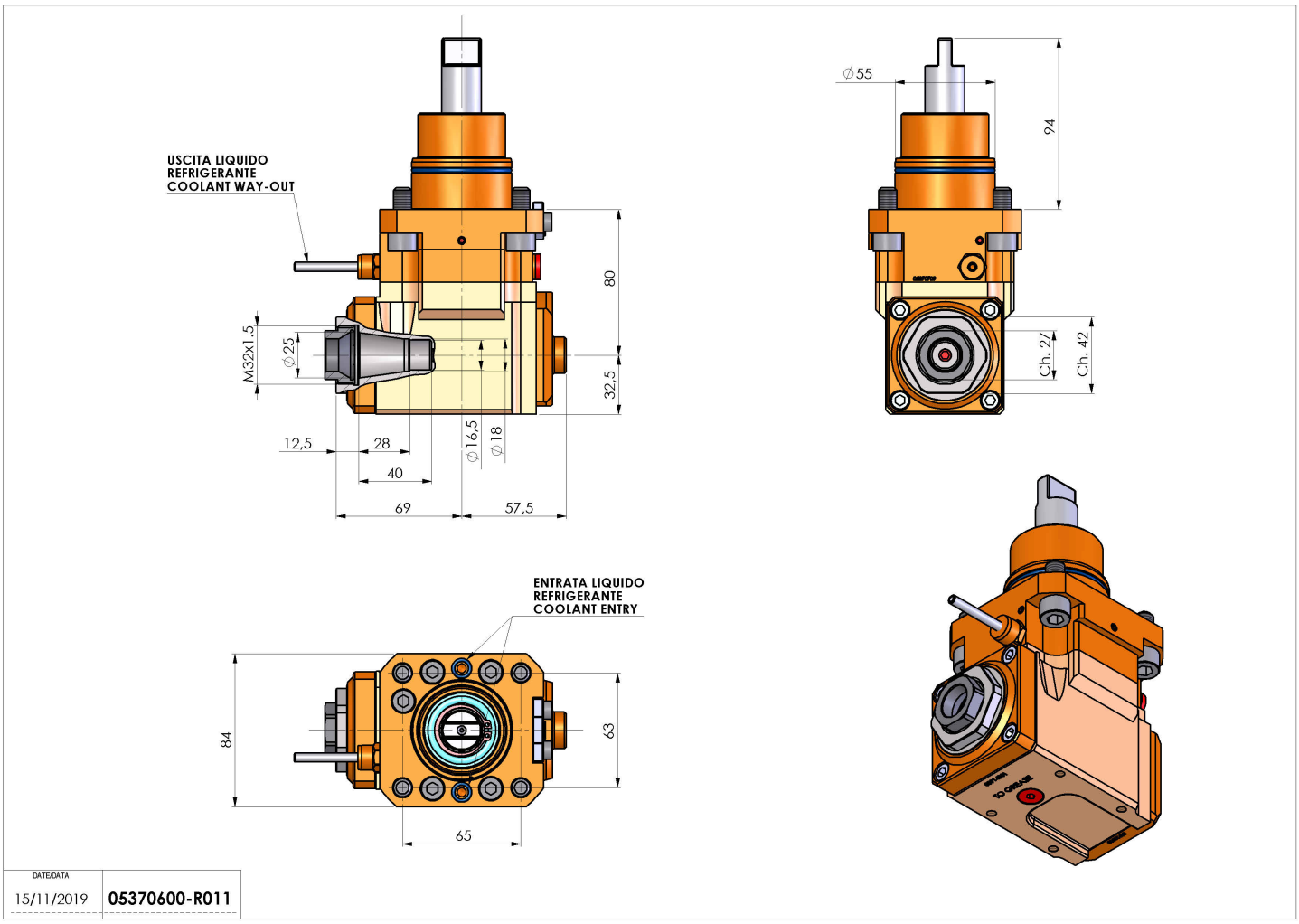

Subject to technical changes