05355500 - LT-A VDI40 ER20F HRF H130 1:2 MZ

Type	LT-A Tool holder angle 90°
Mounting	VDI 40
Tool output	Collet nut ER 20 F - internal nut
Coolant	HRF Internal coolant
Direction of rotation	r1 r2
Max speed [rpm]	in 5000 / out 10000
Max torque [Nm]	in 50 / out 25
Ratio	1:2
H [mm]	130
H1 [mm]	27
Max pressure [bar]	80
Accessories	N.A.
Notes	N.A.
Mounting tips	N.A.

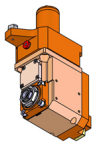

ATTENTION: CHECK THE ORIENTATION OF THE VDI TEETH

Always check live tool dimensions on the turret

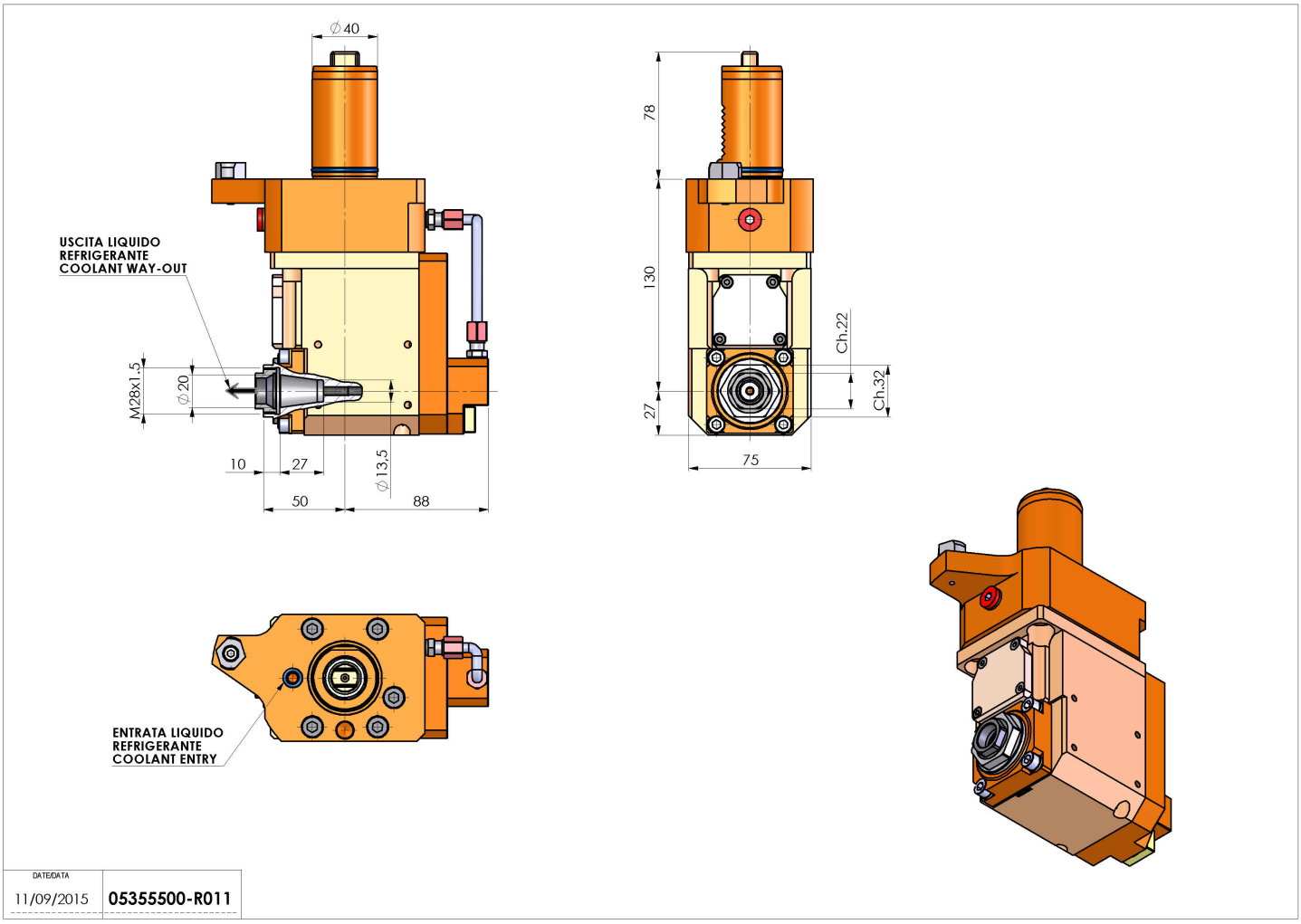

Subject to technical changes