05312800 - LT-A BMT55 BD ER25 LR HS H85

Type	LT-A Tool holder angle 90°
Mounting	BMT 55 BIG DRIVE
Tool output	Collet nut ER 25
Coolant	External coolant
Direction of rotation	r1 r2
Max speed [rpm]	10000
Max torque [Nm]	60
Ratio	1:1
H [mm]	85
H1 [mm]	32.5
Accessories	N.A.
Notes	N.A.
Mounting tips	N.A.

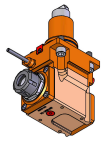

Always check live tool dimensions on the turret

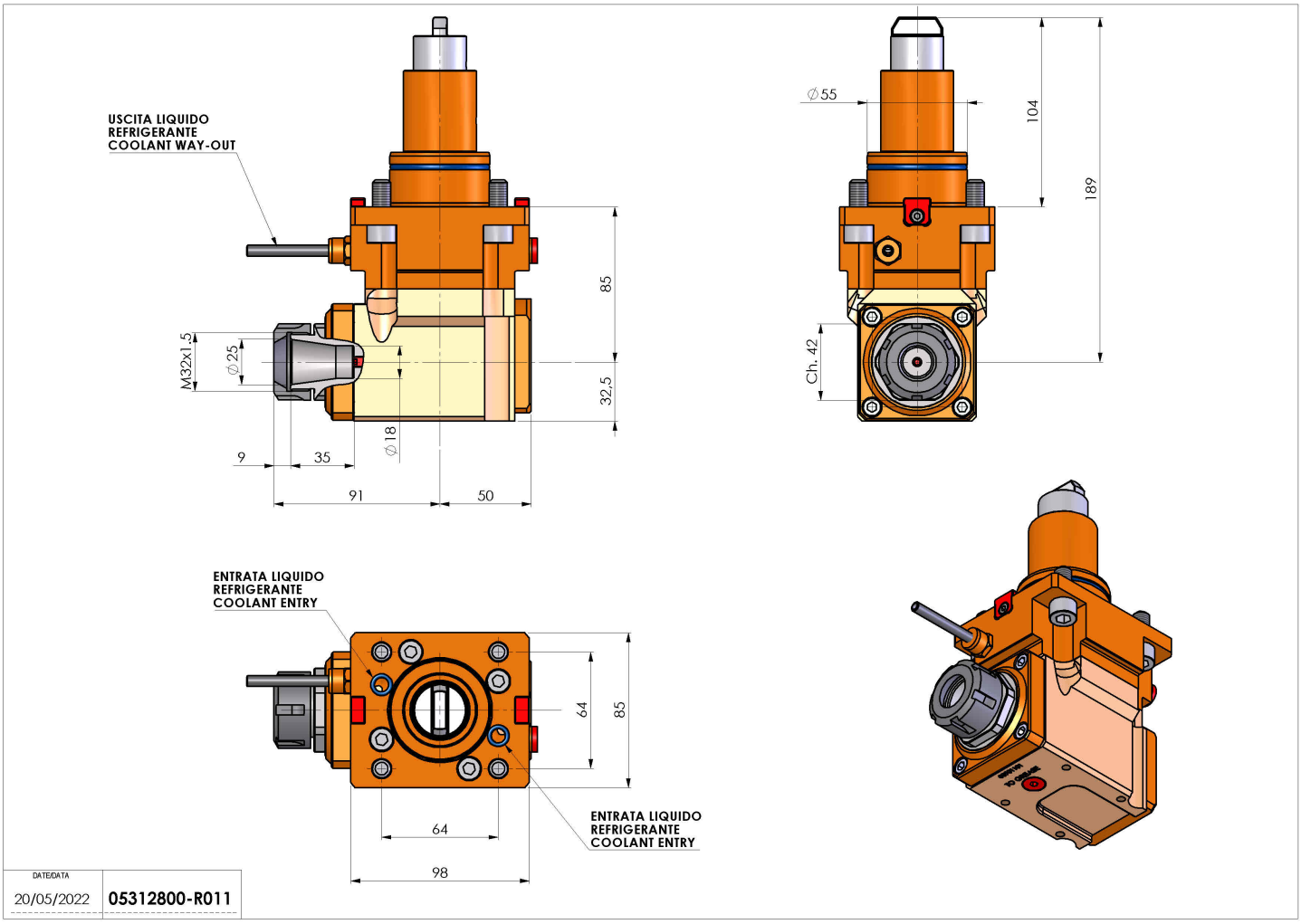

Subject to technical changes