05301400 - LT-A BMT55 C40 LR HRF H85

Type	LT-A Tool holder angle 90°
Mounting	BMT 55
Tool output	Polygonal shank C40 ISO 26623-1
Coolant	HRF Internal coolant
Direction of rotation	r1 r2
Max speed [rpm]	6000
Max torque [Nm]	40
Ratio	1:1
H [mm]	85
H1 [mm]	41
Max pressure [bar]	80
Accessories	N.A.
Notes	N.A.
Mounting tips	N.A.

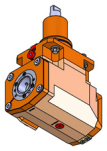

Always check live tool dimensions on the turret

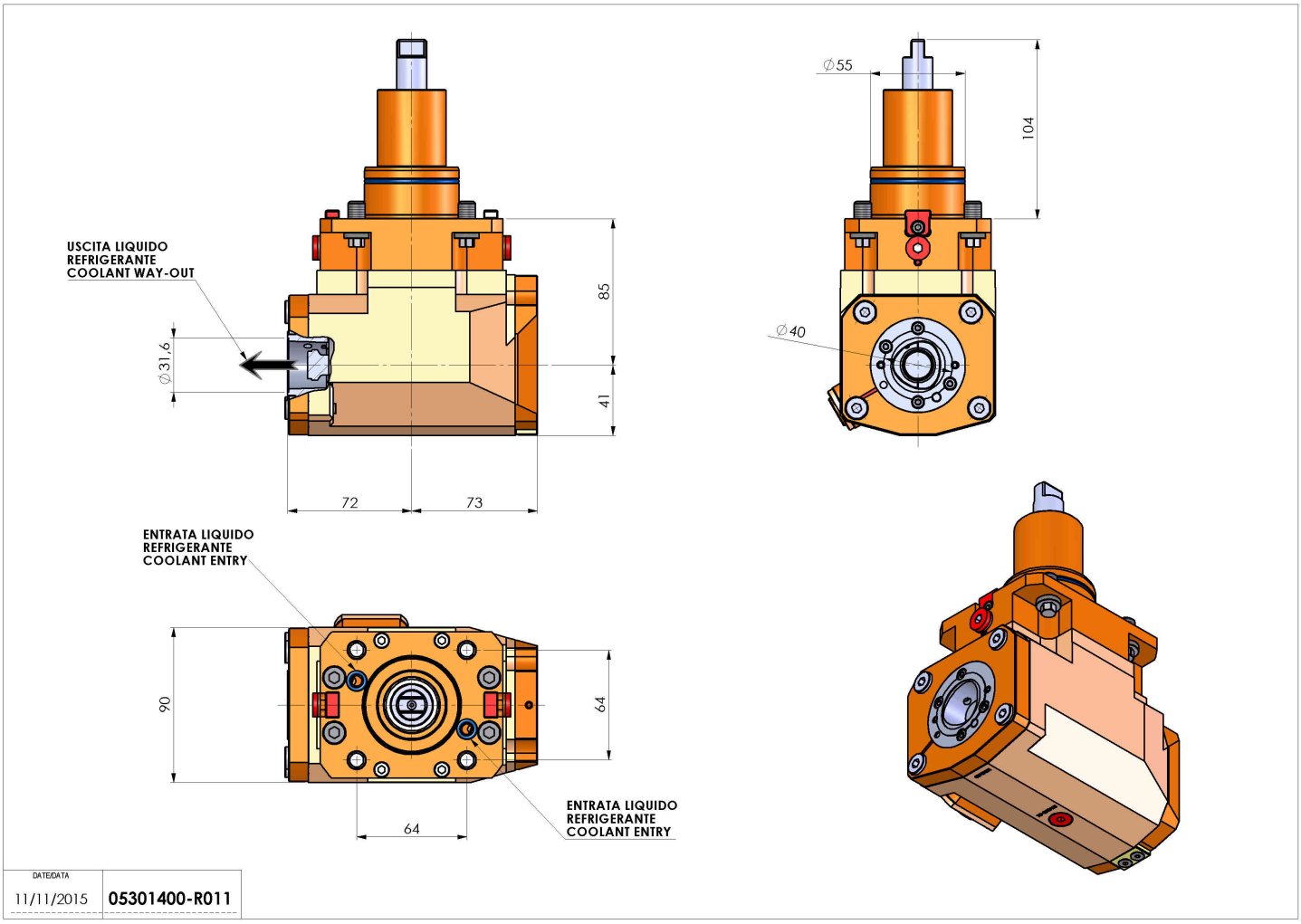

Subject to technical changes