05266400 - LT-A VDI40 DIN138-22 OFR H90OK

Type	LT-A OFS Tool holder offset angle 90°
Mounting	VDI 40
Tool output	Shell-Mill DIN138 22
Coolant	External coolant
Direction of rotation	r1 r2
Max speed [rpm]	6000
Max torque [Nm]	63
Ratio	1:1
H [mm]	90
H1 [mm]	38
Accessories	N.A.
Notes	N.A.
Mounting tips	Verify VDI position betw. turret and live tool

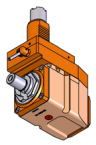

ATTENTION: CHECK THE ORIENTATION OF THE VDI TEETH

Always check live tool dimensions on the turret

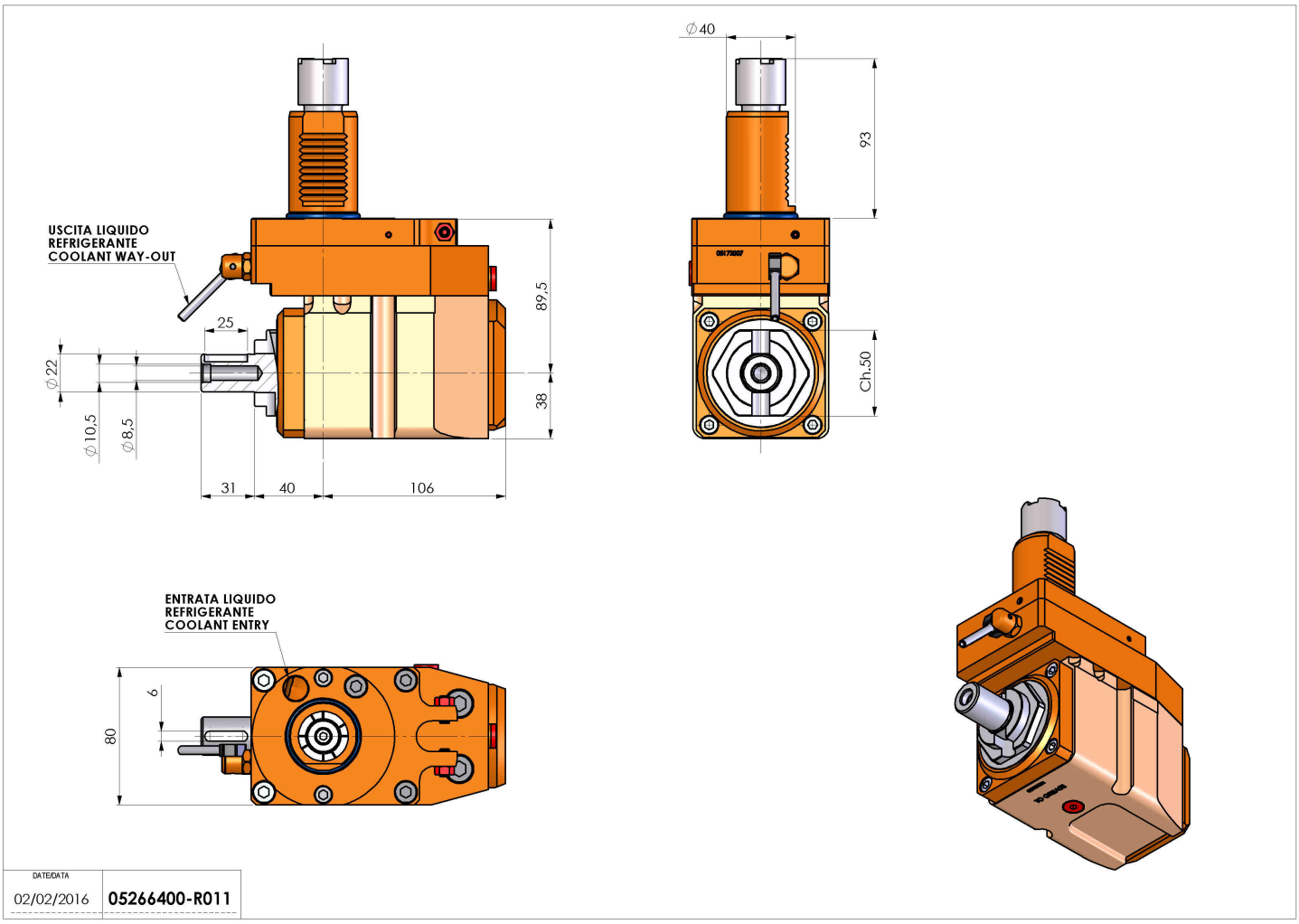

Subject to technical changes