05196100 - LT-A VDI50 ER40FOFSH90RF1809DP

Type	LT-A OFS Tool holder offset angle 90°
Mounting	VDI 50
Tool output	Collet nut ER 40 F - internal nut
Coolant	Internal coolant
Direction of rotation	r1 r2
Max speed [rpm]	6000
Max torque [Nm]	50
Ratio	1:1
H [mm]	90
H1 [mm]	43
Max pressure [bar]	20
Accessories	N.A.
Notes	N.A.
Mounting tips	N.A.

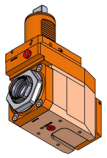

ATTENTION: CHECK THE ORIENTATION OF THE VDI TEETH

Always check live tool dimensions on the turret

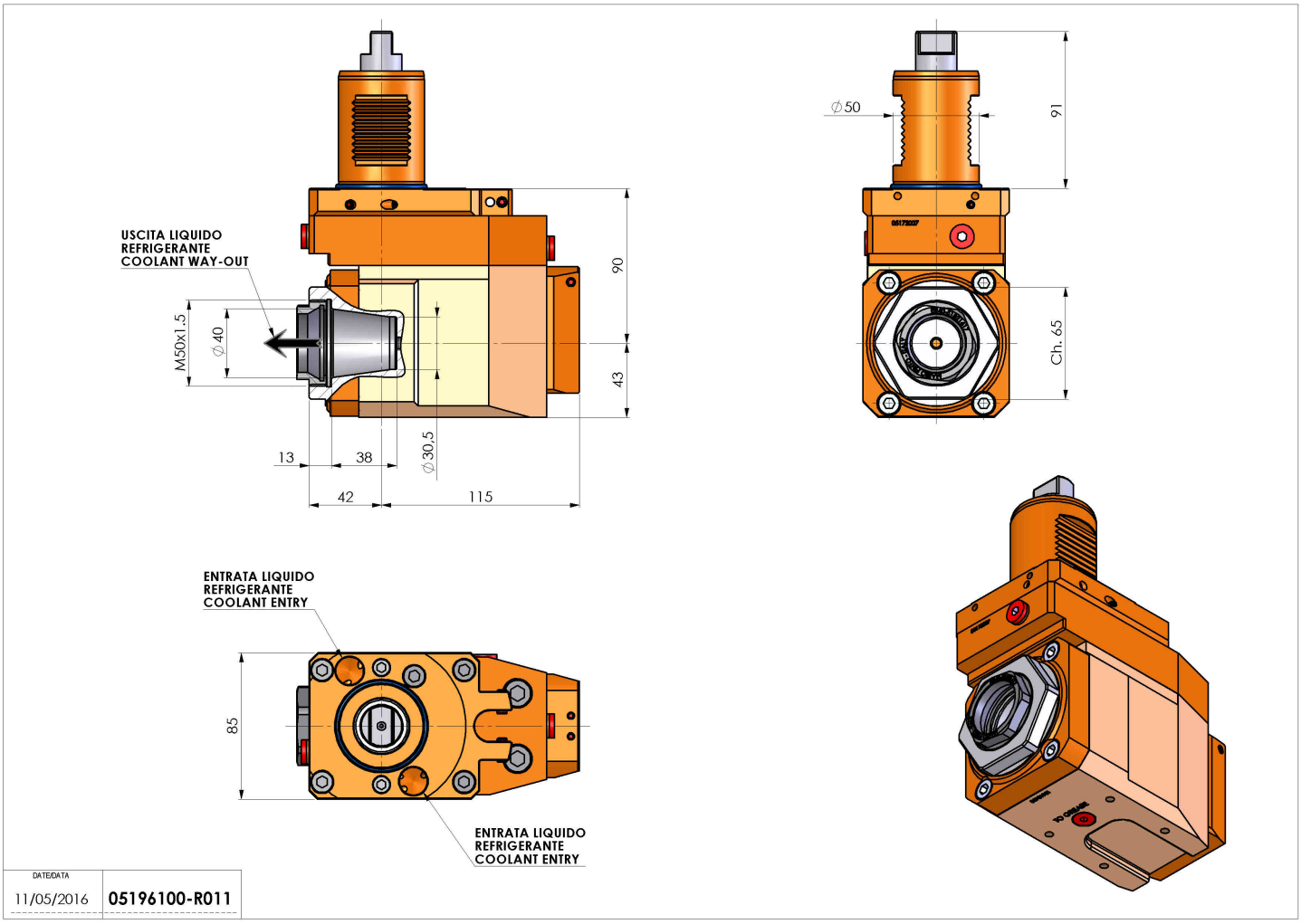

Subject to technical changes