05195300 - LT-S VDI50 DIN138-22 1809 DP

Type	LT-S Tool holder straight
Mounting	VDI 50
Tool output	Shell-Mill DIN138 22
Coolant	External coolant
Direction of rotation	r1 r2
Max speed [rpm]	6000
Max torque [Nm]	80
Ratio	1:1
H [mm]	99,5
Accessories	
Notes	N.A.
Mounting tips	N.A.

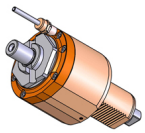

ATTENTION: CHECK THE ORIENTATION OF THE VDI TEETH

Always check live tool dimensions on the turret

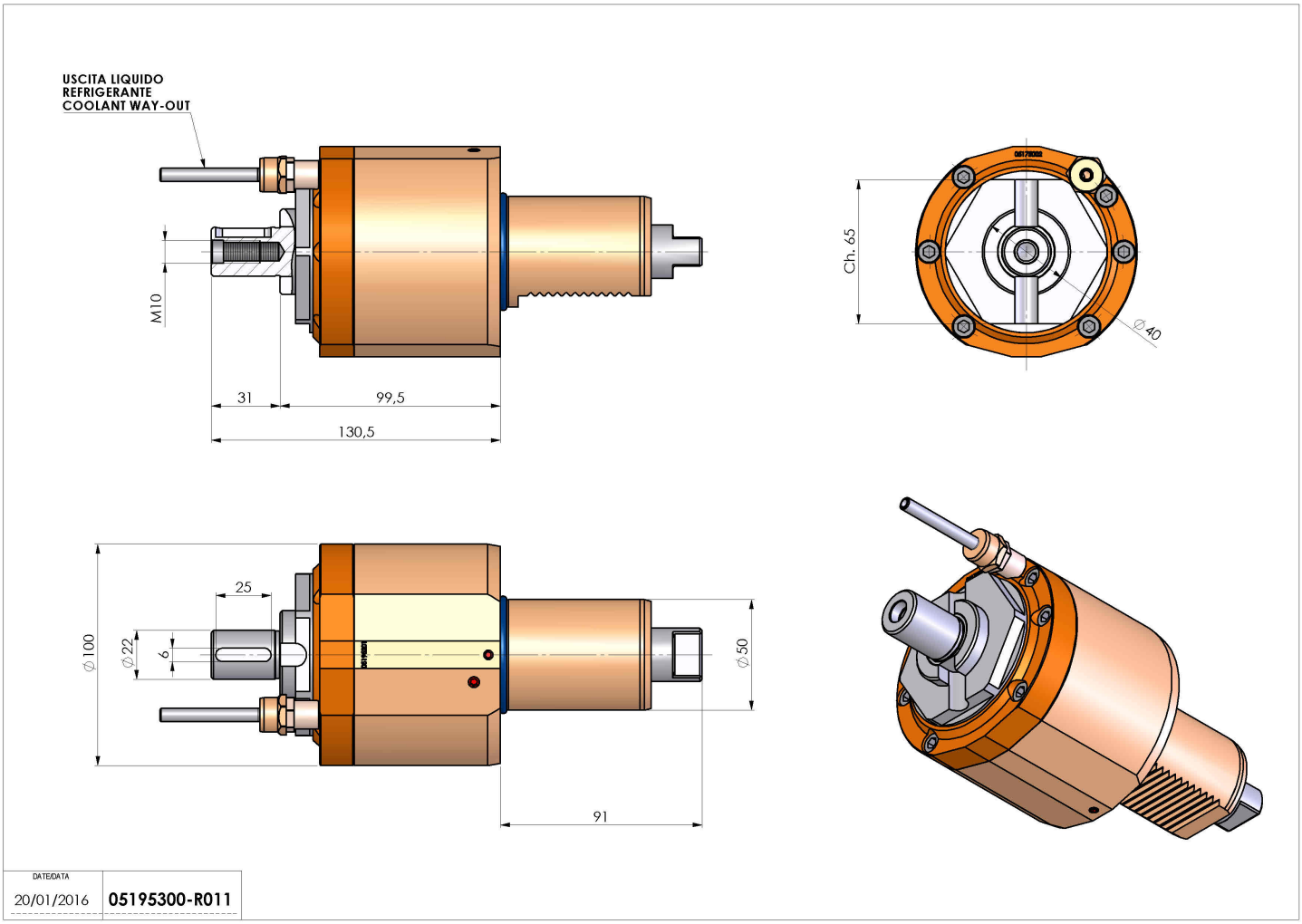

Subject to technical changes