05159000 - LT-A ST35 D40 C12 H90 MU

Type	LT-A ST Slotting tool 90°
Mounting	CYLINDRICAL SHANK 40
Tool output	Tool diameter 12
Coolant	External coolant
Max speed [rpm]	700
Max torque [Nm]	17,5
Ratio	1:1
Y axis adjustment	NO
Feed pushing [N]	1000
Stroke [mm]	35
Work stroke [mm]	30
H [mm]	90
Accessories	N.A.
Notes	N.A.
Mounting tips	Main spindle only

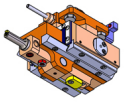

Always check live tool dimensions on the turret

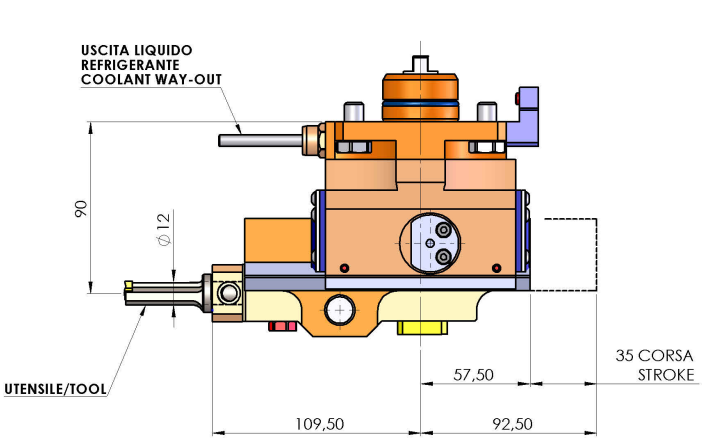

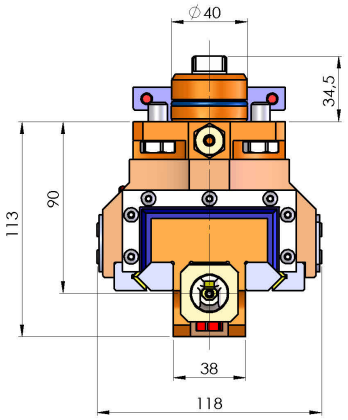

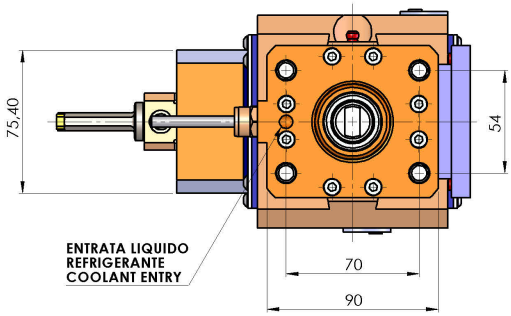

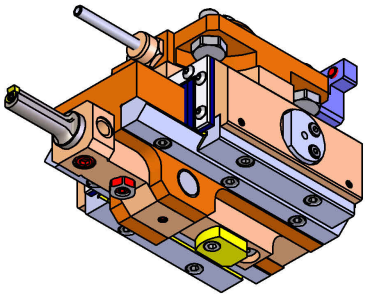

DATE/DATA	
05/11/2015	05159000-R011

Subject to technical changes