05069500 - LT-A D60 DIN138-27 H85 OK

Type	LT-A Tool holder angle 90°
Mounting	CYLINDRICAL SHANK 60
Tool output	Shell-Mill DIN138 27
Coolant	External coolant
Direction of rotation	r1 r2
Max speed [rpm]	6000
Max torque [Nm]	100
Ratio	1:1
H [mm]	85
H1 [mm]	43
Accessories	N.A.
Notes	N.A.
Mounting tips	Main and secondary spindle

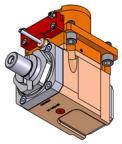

Always check live tool dimensions on the turret

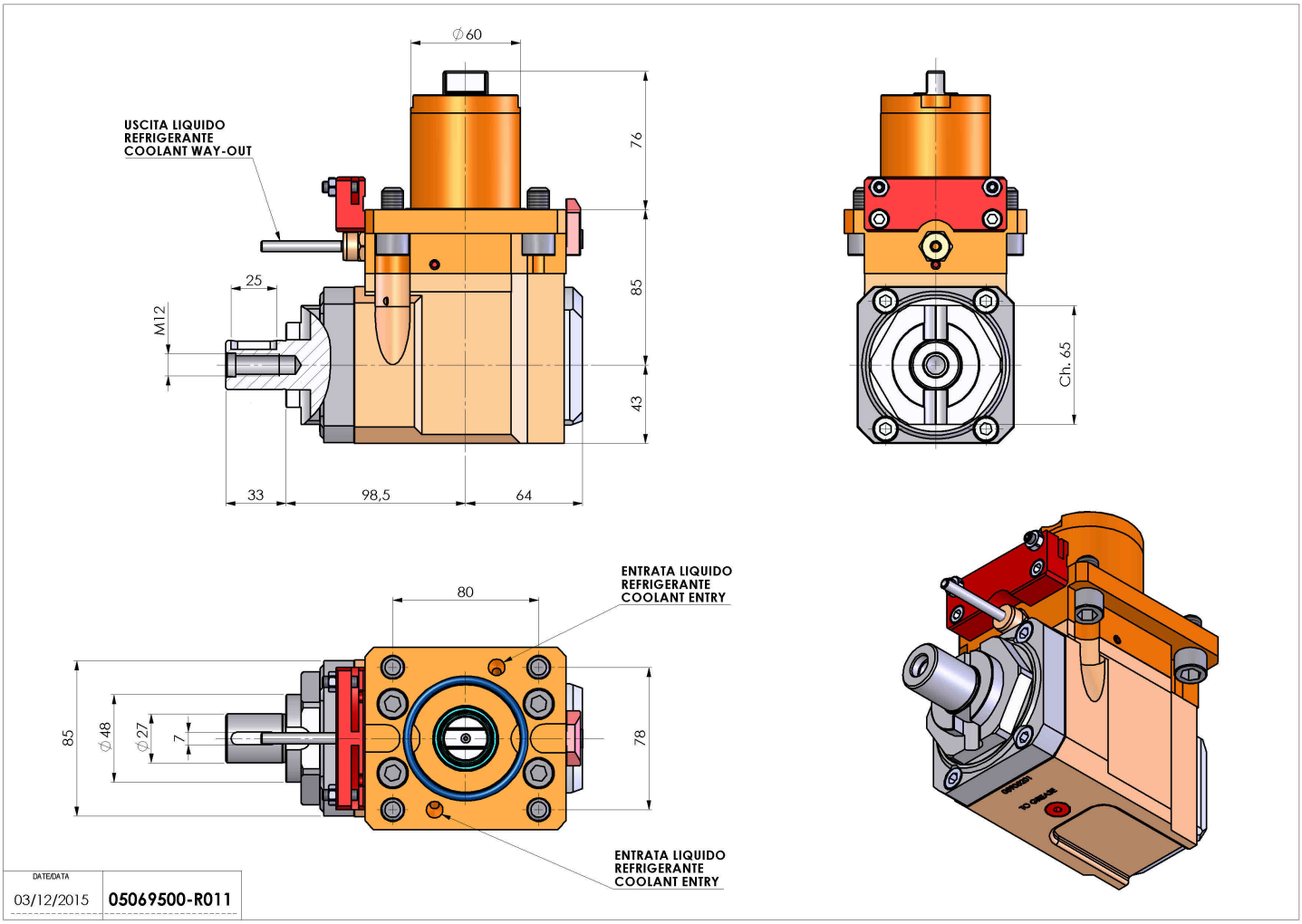

Subject to technical changes