05019200 - LT-A D44 DIN138-16 L-R H60 NK

Type	LT-A Tool holder angle 90°
Mounting	CYLINDRICAL SHANK 44
Tool output	Shell-Mill DIN138 16
Coolant	External coolant
Direction of rotation	r1 r2
Max speed [rpm]	6000
Max torque [Nm]	30
Ratio	1:1
H [mm]	60
H1 [mm]	32,5
Accessories	N.A.
Notes	N.A.
Mounting tips	N.A.

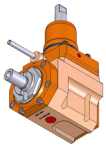

Always check live tool dimensions on the turret

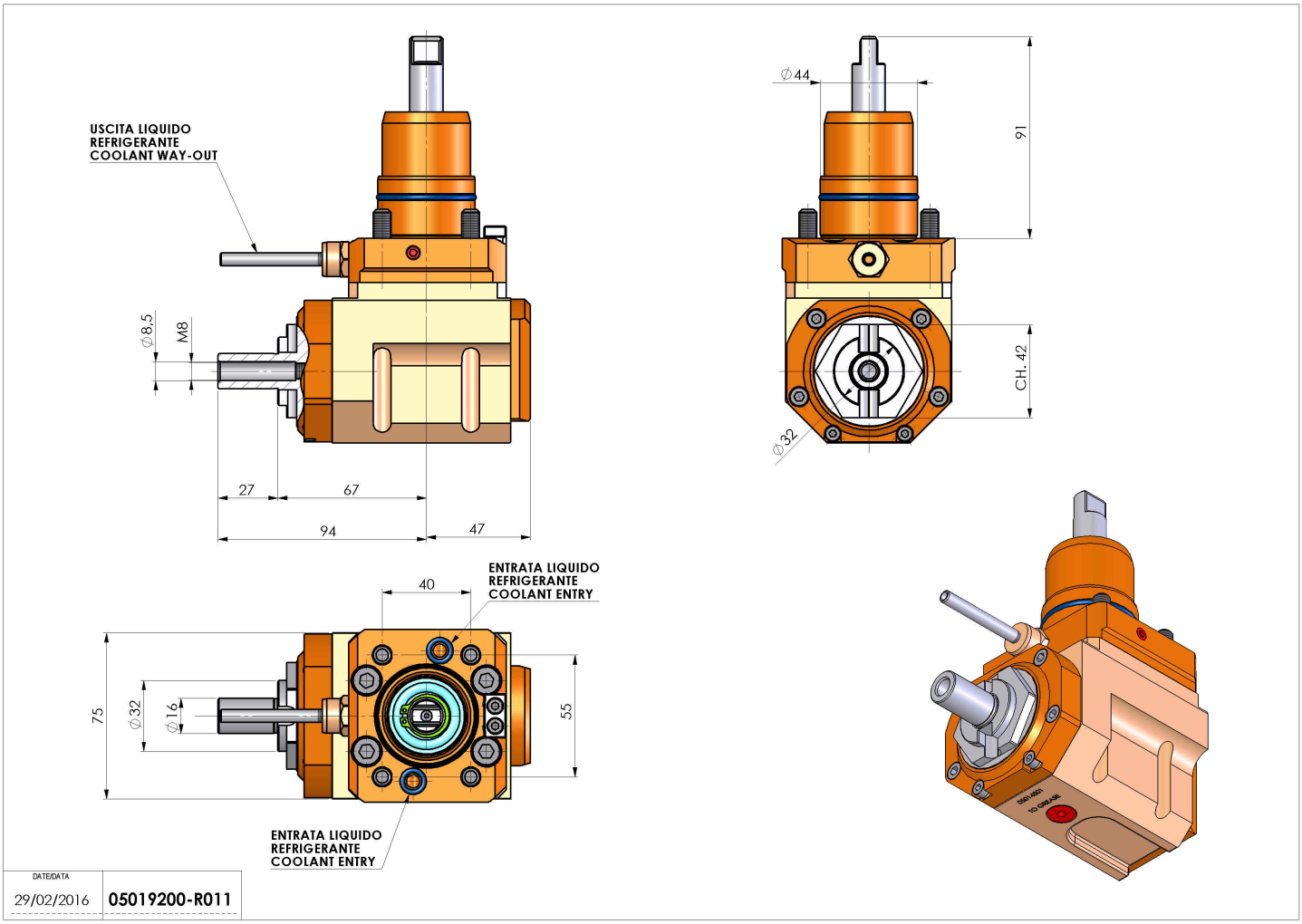

Subject to technical changes