05019100 - LT-A D44 ER25 L-R RF H60 NK

Type	LT-A Tool holder angle 90°
Mounting	CYLINDRICAL SHANK 44
Tool output	Collet nut ER 25
Coolant	Internal coolant
Direction of rotation	r1 r2
Max speed [rpm]	6000
Max torque [Nm]	30
Ratio	1:1
H [mm]	60
H1 [mm]	32,5
Max pressure [bar]	20
Accessories	N.A.
Notes	N.A.
Mounting tips	N.A.

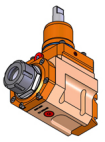

Always check live tool dimensions on the turret

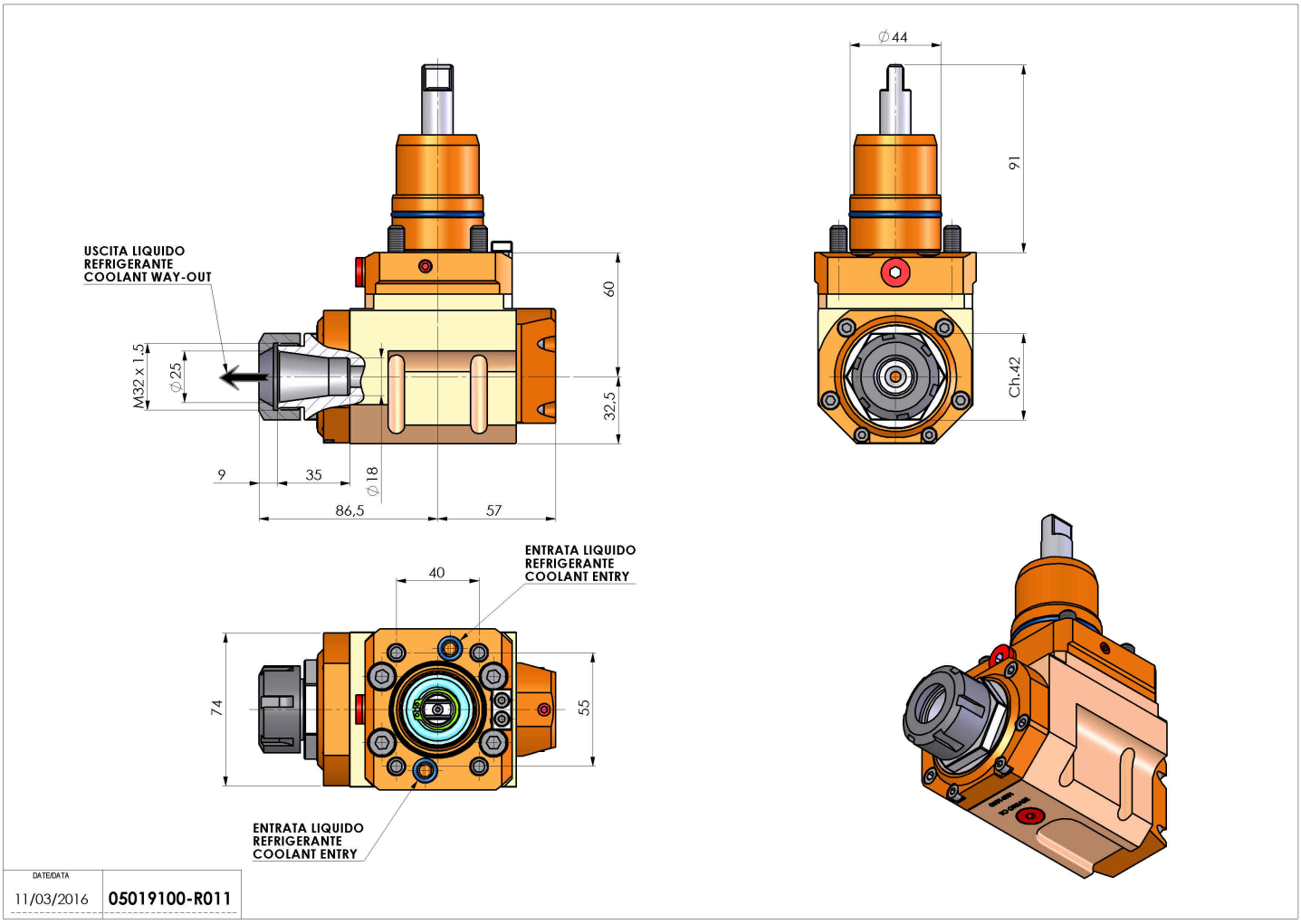

Subject to technical changes